GitHub repository where all documentation & code can be found. billbill100 (github.com)

ESP32 3d print case and Sensor & Laser Enclosures V1.1 03/03/2026

To print the case.
There are four parts to print.
1) The main box (top sides & front).
2) Case bottom.

3) The rear panel, of which there are three options to choose from.
a) plain, which is the easiest to print.
b) the version with indented legends, labelling the sockets.
c) Third version has flat lettering. This requires a little more skill to print as the lettering needs to be selected and given a different colour to the box. Then the slicer needs setting so it prints all of the text first, followed by the rest of the rear panel.

4) The final part is the expansion board frame. (Not required for the pcb version).
There is also a blanking cap to print, for unused holes.

To Assemble. Four M3 X 25mm bolts go through the four holes in the front of the case.
On the inside, the TFT screen fits onto the bolts.

The expansion board frame (legs down) fit onto these bolts and it is all secured together with four washers and nuts.

The expansion board is mounted to the frame by drilling four small holes in the expansion frame, to match that of the expansion board itself, & attached with 2mm screws. The holes are not pre-drilled as expansion board hole positions can vary.

The 3d case is designed to be screwed together using 2mm self-tapping screws.

There is a lot of wiring to be connected (the pcb version negates some of this) and so it can be easier not to mount the expansion board until wiring is complete.

Main case

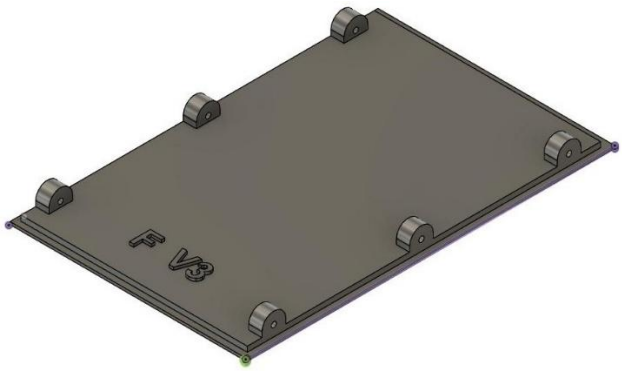

Rear

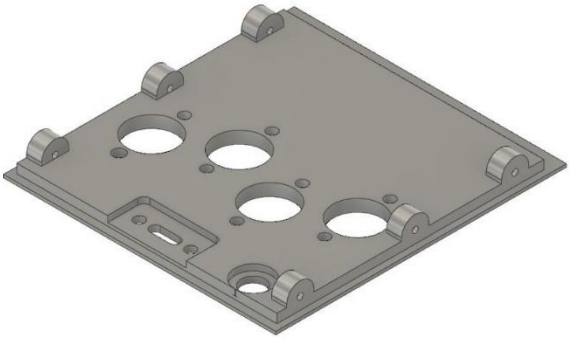

Back

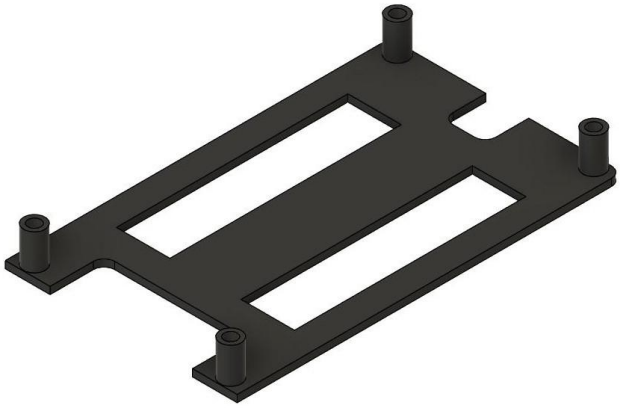

Expansion Frame

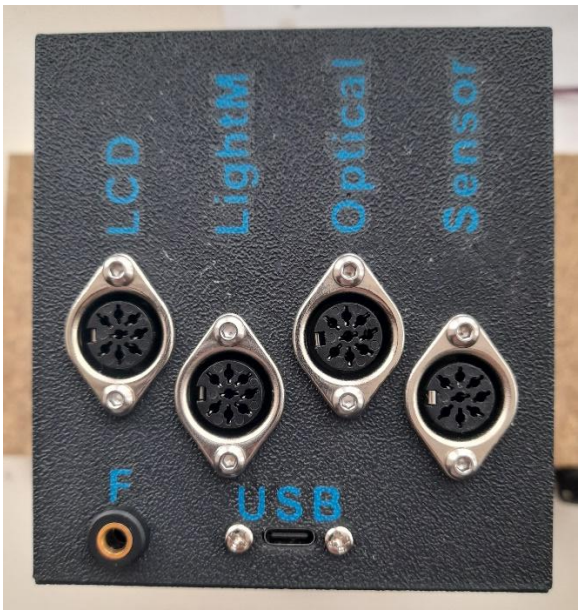

rear, showing option 3, with the colour printed legends.

Note – The case and enclosures are designed for the 13mm buttons, DIN sockets, USB cable and flash socket, as listed in the parts document.

To print & assemble the sensor enclosure.

Note: The 3d printed parts will accept placement of sensors and Lasers for horizontal vertical shutter testing. However this document describes only how to make a horizontal tester.

The sensor holder enclosure consists of two parts.
The lid, where the sensors are mounted and the rear box.

The stripboard is cut to fit in the box. Do not cut it to fit too tightly, a little play makes it easier to align. A junior hacksaw will cut the board.

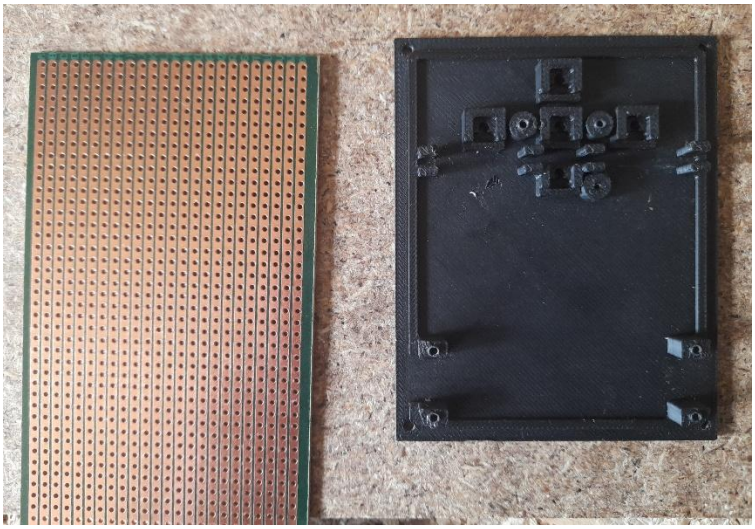

Stripboard and enclosure

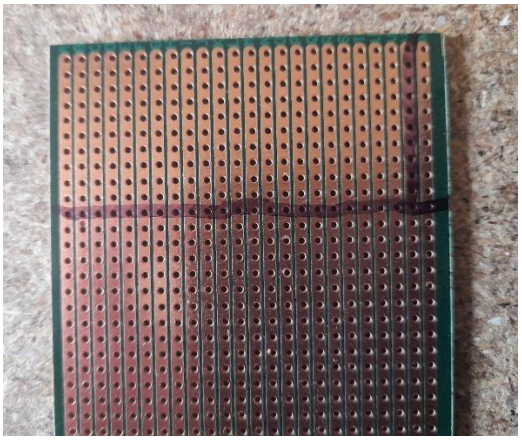

If using the board specified in the parts list, cut through the 11th line of holes then trim of 1 ½ holes from the edge. A junior hacksaw works well for this. The board is tough.

Trial fit the stripboard in the lid and then put into the box, to ensure it is not too long.

CAREFULLY bend the legs of the sensors up and insert them into their holders. (Only two sensors for the Arduino version, in the outside holders).
Mark the legs with a marker-pen where they line up with the holes – black pen used here.

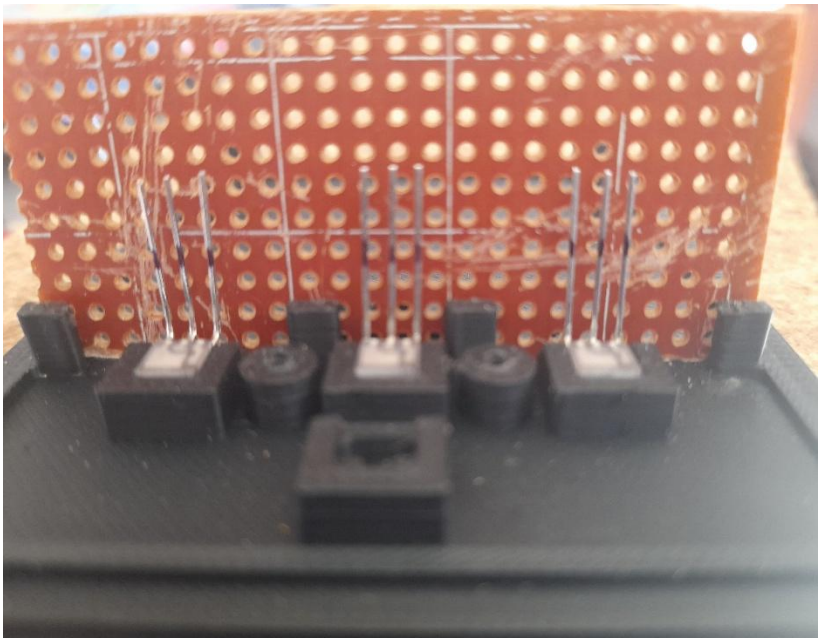

Remove the stripboard and sensors. Bend the legs at the marked point back 90 degrees towards the stripboard.
The legs canbe placed in the stripboard holes, they will need to be bent part slightly and then put back into the lid.

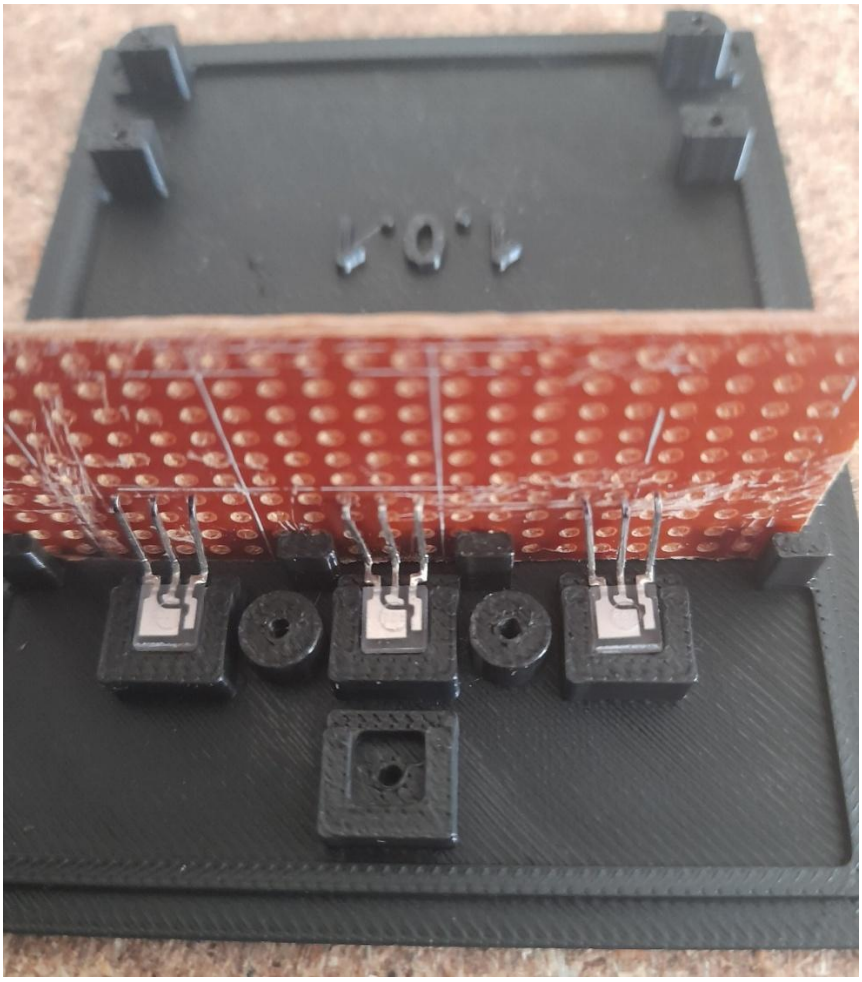

Ensure the sensors are located correctly. By carefylly holding the sensors and turning the lid over, the sensor lens can be seen in the holes.

Fit the T shaped sensor holder and screw into place.
Carefully solder each of the sensor legs. Inspect the solder joints to ensure they have not bridged the copper strips. Using a multimeter on the Ohms scale, measure between each row of copper strips to ensure there are no short circuits.

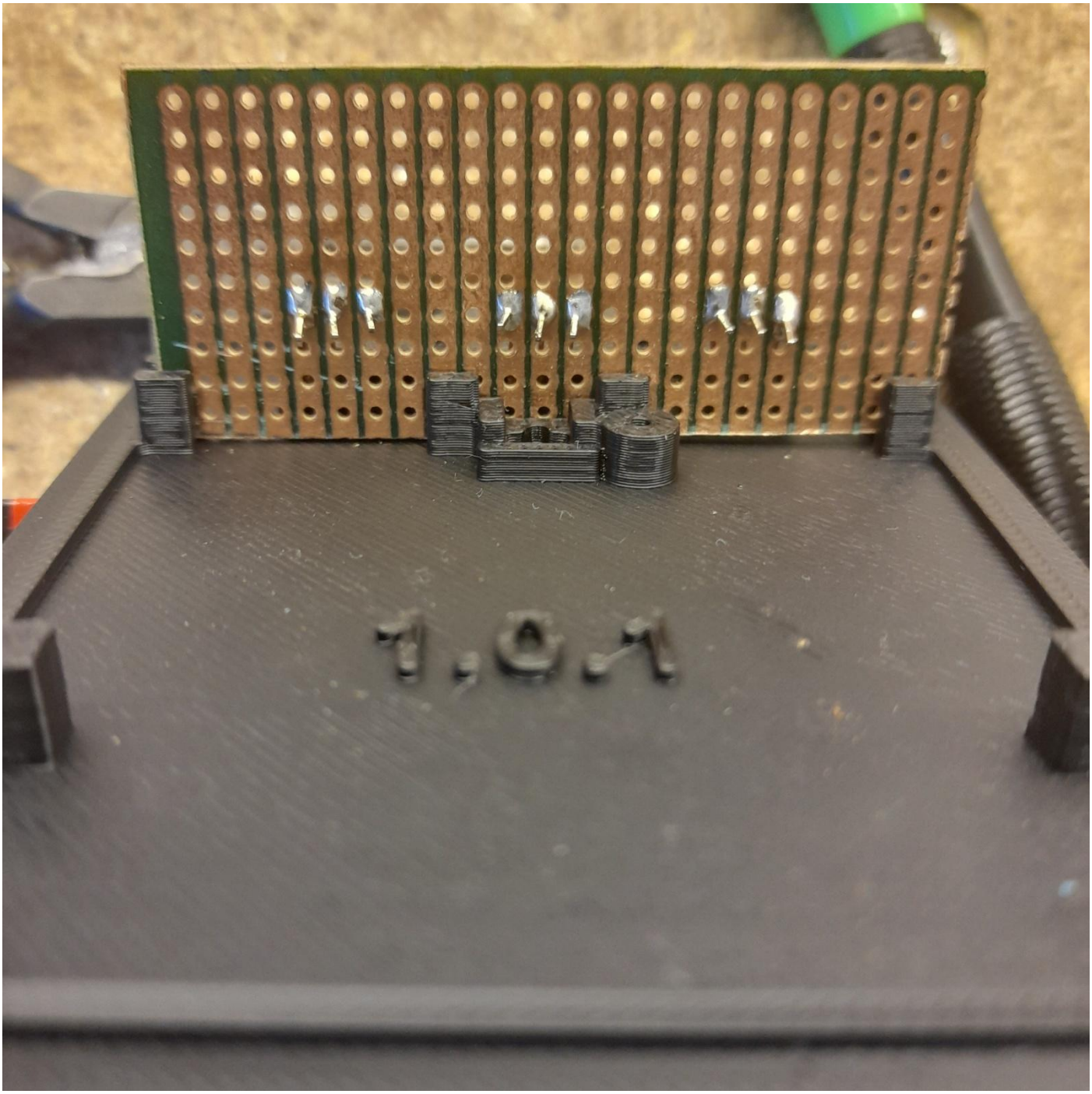

0.1uF capacitors are added. These go across the outer legs of the sensors.

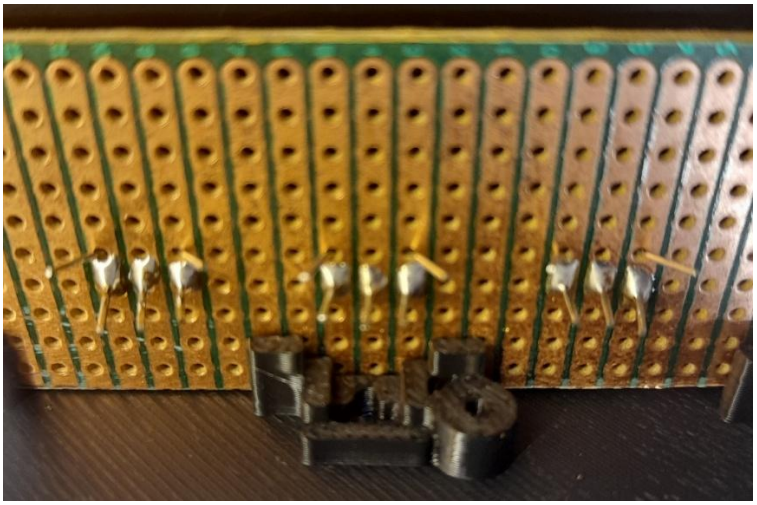

The capacitors can now be soldered.
Visually inspect the soldering and again, using a multimeter, ensure there are no short circuits.

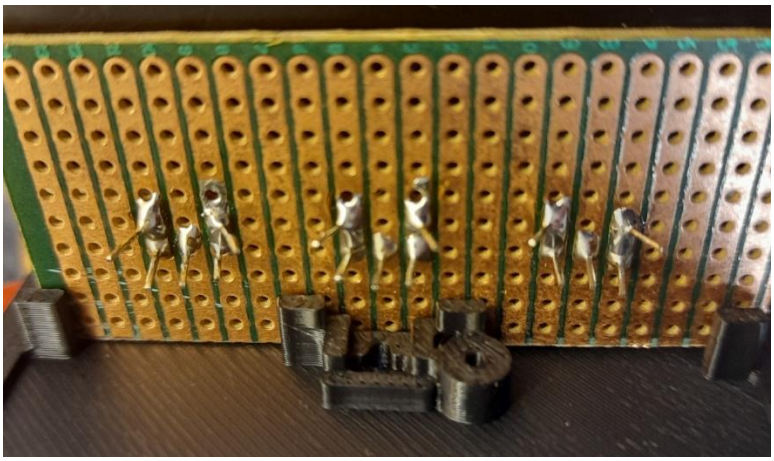

Next 10K resisters are added between the +V and the middle leg of the sensor and soldered.

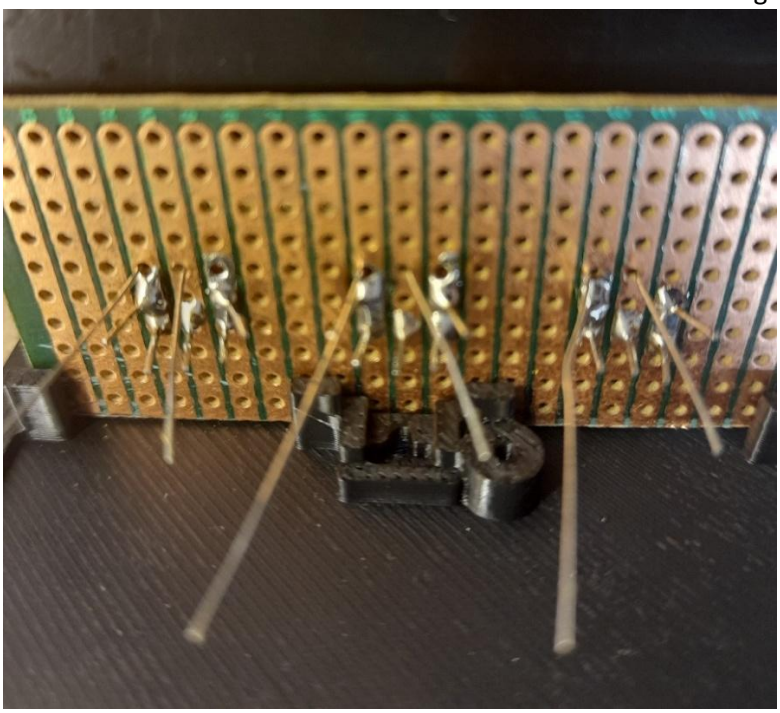

The board will now look like this, with all the components soldered.

Visually inspect the soldering and again. Using a multimeter, ensure there are no short circuits.
The legs of the components can be trimmed.

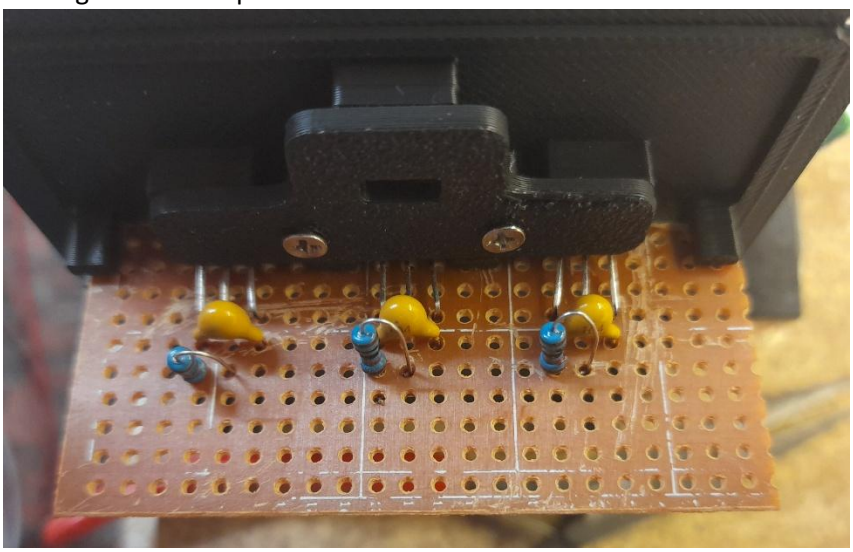

The +V of each sensor (left leg) is connected by soldering a wire in daisy-chain, right to left and terminating on the first row of the stripboard.

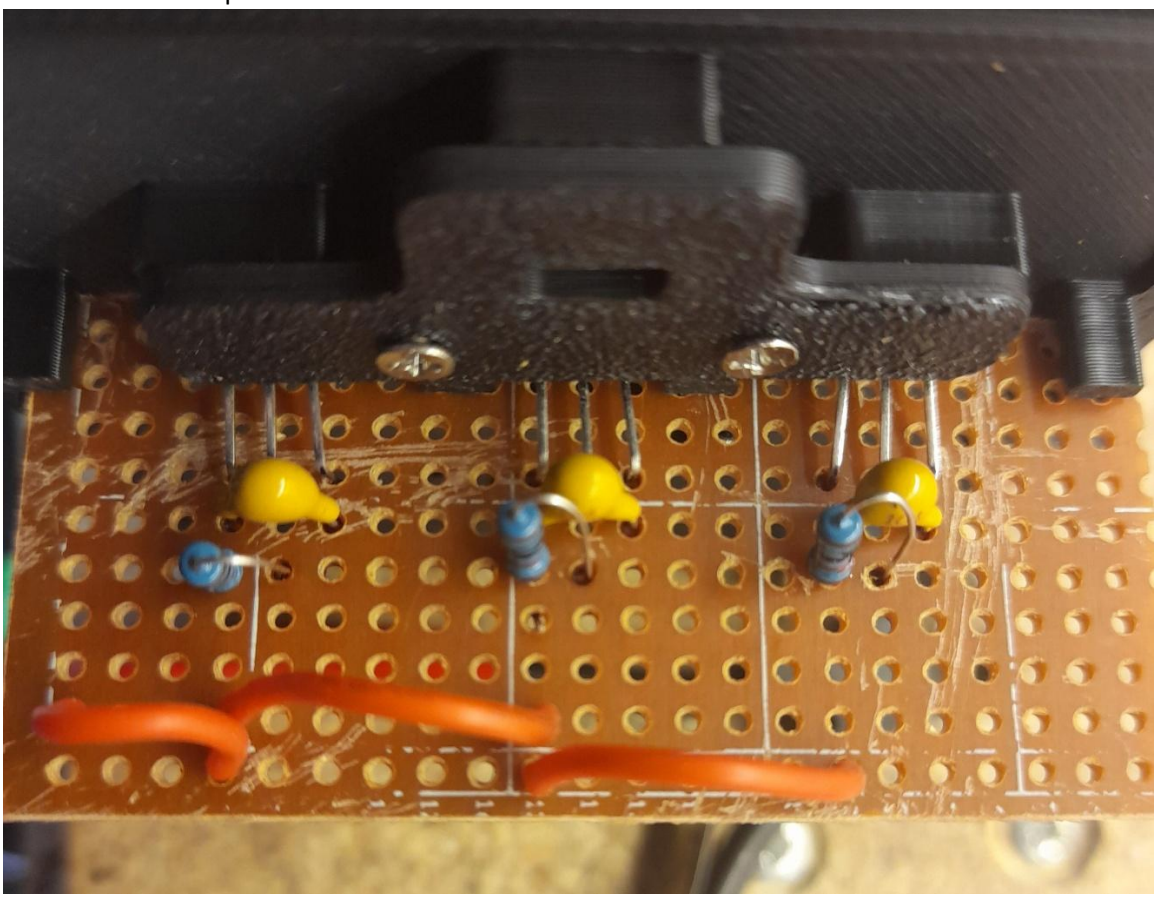

The 0V of each sensor (right leg) is connected by soldering a wire in daisy-chain, right to left and terminating on the second row of the stripboard.

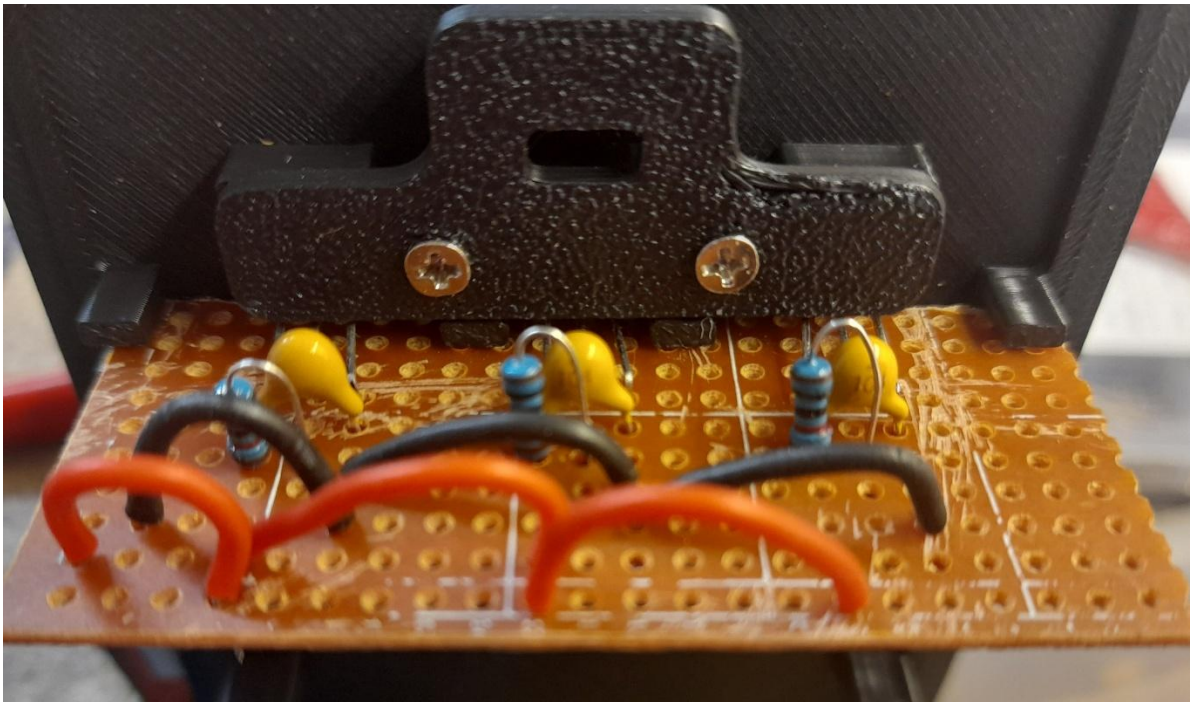

+V & 0V wires from the screw terminal board are now soldered to the respective copper strip.
Note: - on the prototype it was thought a good idea to have all wires connected on the bottom, as shown here.
It does work but is more difficult than if they come from above.
It might be better to have the wires entering from above and cutting a corner off the stripboard, to allow the wires through and into the bottom of the box, to exit.

The +V and 0V for the Lasers can also be connected here.

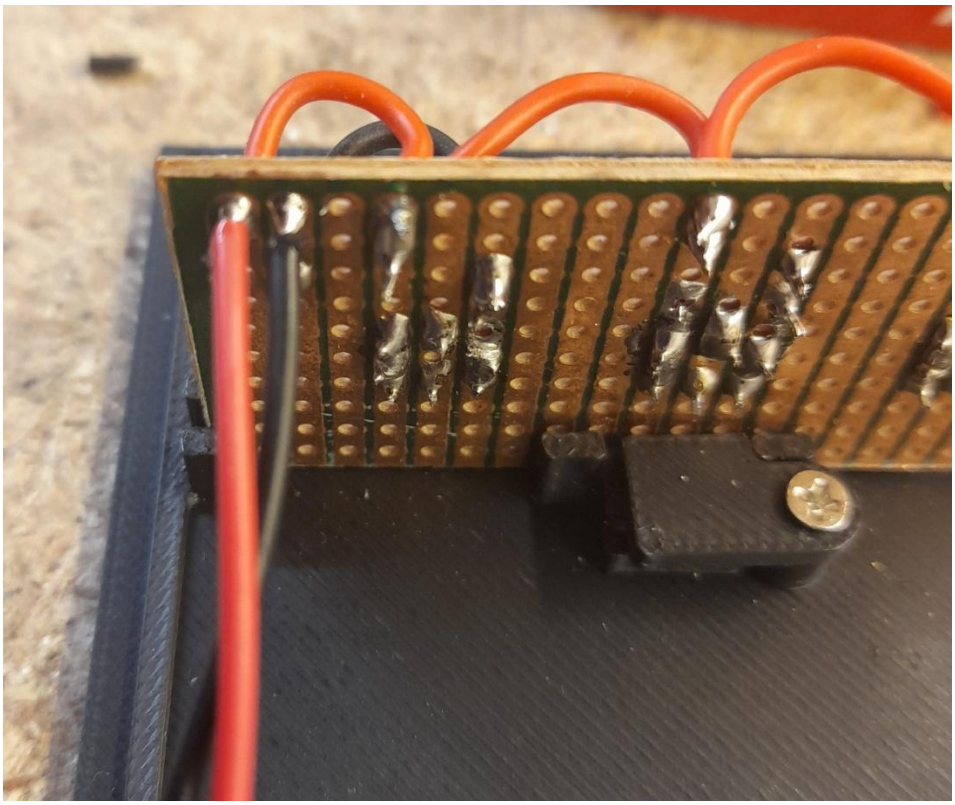

The three wires for the sensors are now soldered to the centre leg of each sensor.

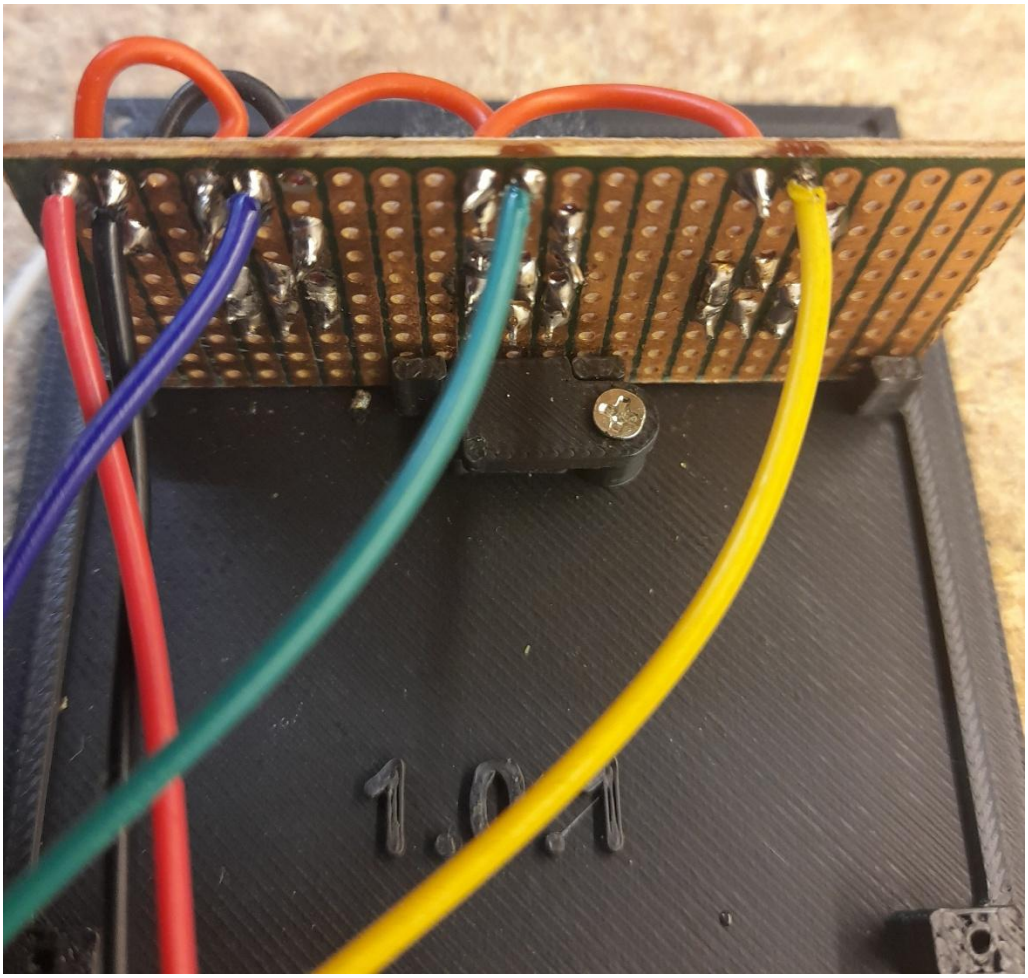

Wires are secured under the clamps.
(White wire shown is not connected. Brown & purple wire on the right feeds the Lasers.)

With a multimeter set on the Ohms scale. Measure between the +V and 0V wires. Ensure there is not a short circuit. Now measure between the +V wire and each of the sensor output wires. Ensure there are no shorts. The meter should show 10K Ohm
If voltage is applied directly into the microcontroller pin, without the resister, it WILL destroy the board.

To mount the enclosures.
The Laser encosure should be printed. This and the sensor enclosure is mounted to a suitable baseboard.
This should be sturdy enough not to warp. Here, a piece of 18mm flooring chipboard was used.
(The wood here was left oversize for the prototype & was trimmed later).

Suitable screw holes were drilled in the baseboard & counterbored (to sink the head).
The enclosures were then screwed to the board.

Note the orientation of the boxes. The lid of the sensor enclosure faces towards the Lasers.

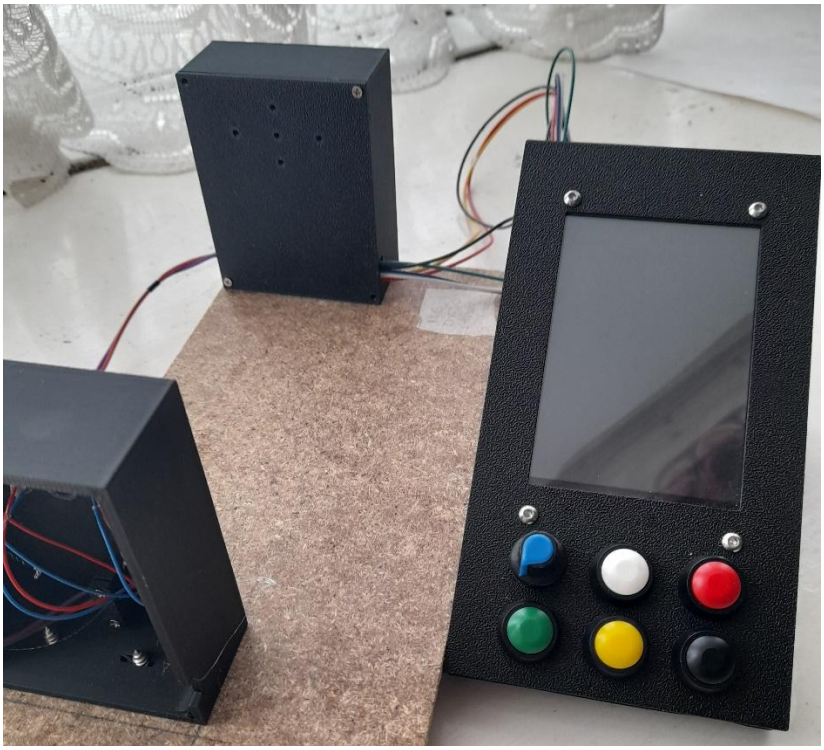

To assemble & align the Laser enclosure.

Each of the Laser +V wires can be soldered together and connected to the +3 or +5V supply. Do the same with the 0V wire. Ensure all joints are insulated.
Do not try to focus the Laser to a pin-point, it needs to illuminate fully, the hole in the sensor box.

Each Laser needs adjusting to point at the corresponding sensor.
The mounting frame can be turned on-end, so the Laser points down. This makes alignment easier.

When the Laser has been test-aligned and the light covering at least the sensor hole diameter,
hot-glue is used to hold the Laser in place. One has to hold the Laser in place until the glue cools.
Additional glue can now be used around the Laser, to hold it firmly in place and repeated for the other Lasers.

The wiring from the enclosers is terminated, either using a connector or directly to the expansion board.

The rear cover can be screwed to the Laser box and this completes assembly.